A.D. 1810 . . . . . Nº 3345.

SPECIFICATION

OF

MARY TOWNLEY.

CONSTRUCTION OF CHIMNEYS, &c.

LONDON:
PRINTED BY GEORGE E. EYRE AND WILLIAM SPOTTISWOODE,
PRINTERS TO THE QUEEN'S MOST EXCELLENT MAJESTY:
PUBLISHED AT THE QUEEN'S PRINTING OFFICE, EAST HARDING STREET,
NEAR FLEET STREET.
Price 6d.
1854.

A.D. 1810. . . . . N° 3345.

Construction of Chimneys, &c.

TOWNLEY'S SPECIFICATION.

TO ALL TO WHOM THESE PRESENTS SHALL COME, I, MARY, the wife of JAMES TOWNLEY, of Ramsgate, in the County of Kent, Esquire, send greeting.

WHEREAS His present most Excellent Majesty King George the Third, in and by His Royal Letters Patent under the Great Seal of the United Kingdom of Great Britain and Ireland, bearing date at Westminster, the Eighth day of June now last past, for Himself, His heirs and successors, did give and grant unto me, the said Mary Townley, His special licence, full power, sole privilege and authority, that I, the said Mary Townley, my executors, administrators, or assigns, by myself, or themselves, or by my or their deputy or deputies, servants, or agents, or such others as I, the said Mary Townley, my executors, administrators, and assigns, should at any time agree with and no others, from time to time and at all times during the term of years therein expressed, should and lawfully might make, use, exercise, and vend, within England, Wales, and the Town of Berwick upon Tweed, my Invention or method applicable to the "PREVENTION OR CURE OF SMOKEY CHIMNIES;" in which said Letters Patent there is contained a proviso obliging me, the said Mary Townley, by an instrument in writing under my hand and seal, particularly to describe and ascertain the nature of my said Invention, and in

what manner the same is to be performed, and to cause the same to be inrolled in His Majesty's High Court of Chancery within two calendar months next and immediately after the date of the said Letters Patent, as in and by the same, reference being thereunto had, will more fully and at large appear.

NOW KNOW YE, that in compliance with the said proviso, I, the said Mary Townley, do hereby describe and ascertain the nature of my said Invention, and the manner in which the same is to be performed as follows, that is to say:—

That part of the plan marked A supposes the top of a chimney, shewing three flues in a single stack. That part of the plan marked B supposes the shaft of the chimney A, shewing the brackets immediately above which support the canopy or dome in that part of the plan marked C, and which is to be fixed on the top of the brackets quite close, so that no smoke can pass from one flue to the other. Those parts of the plan marked D suppose the profiles of the brackets, which may be made either by potters earth and burnt, or by the bricks projecting and plastered with cement, or may be made in various other modes, and a truss or bracket formed as fancy may guide the workman, and as supposed in that part of the plan marked E. That part of the plan marked F, supposes a chimney top shewing six flues in a double stack, and also shewing the partitions which divide the flues and support the canopy or dome, and of which particular care must be taken; they are so closely cemented together that the smoke may not pass from one to another; and to mind that the flues are all independent of each other and likewise to observe that there is not any cavity whatever in the chimney. It is necessary to remark that if the covering should not prevent the chimney from smoking, then the application of the tube marked H, as shewn in that part of the plan marked G, will cause an effectual cure, the diameter of the tube to be three inches, and the mouth of it to be formed similar to that of the mouth of a French horn instrument, which is to be covered with a wire grate not less than one inch square, that the air may not be impeded and that birds, &c. may be kept out.

In witness whereof, I, the said Mary Townley, have hereunto set my hand and seal, this Fourth day of August, in the fiftieth year of the reign of our Sovereign Lord George the Third, by the grace of God, of the United Kingdom of Great Britain and Ireland, King, Defender of the Faith, and in the year of our Lord One thousand eight hundred and ten.

MARY TOWNLEY. (L.S.)

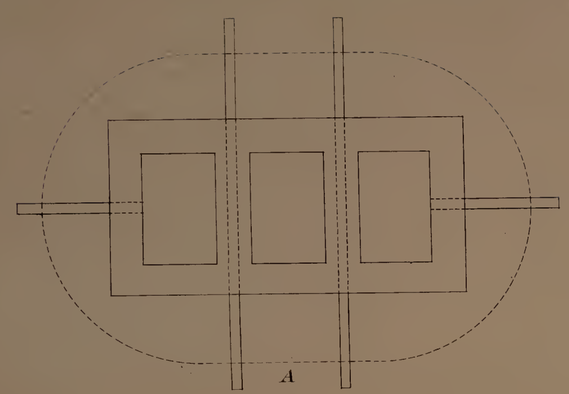

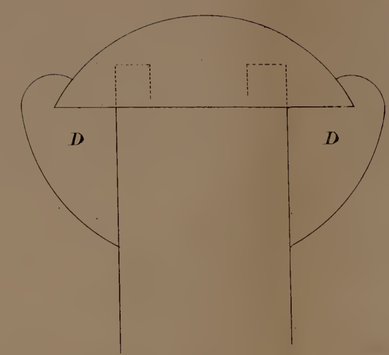

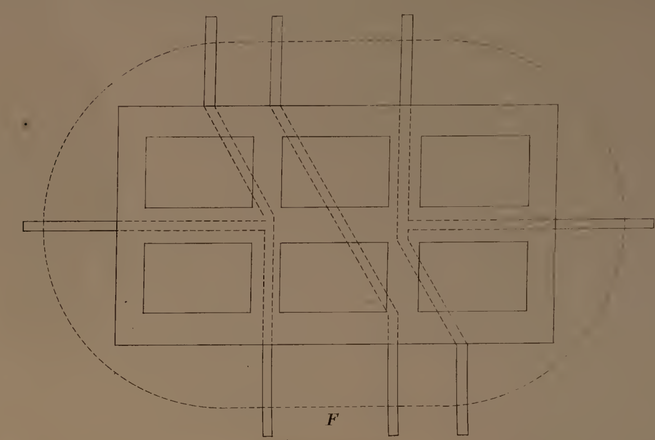

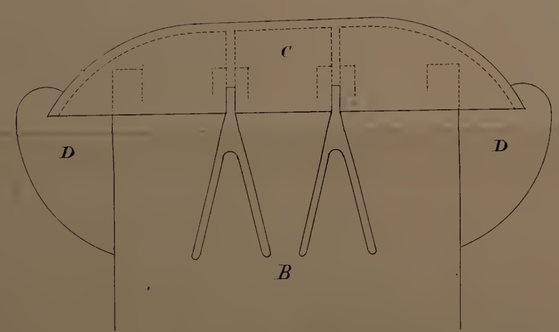

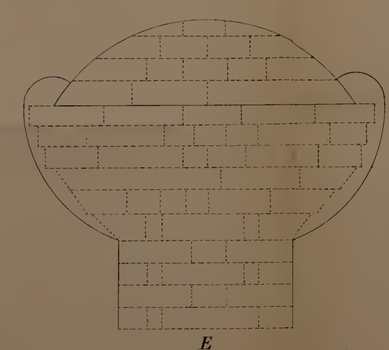

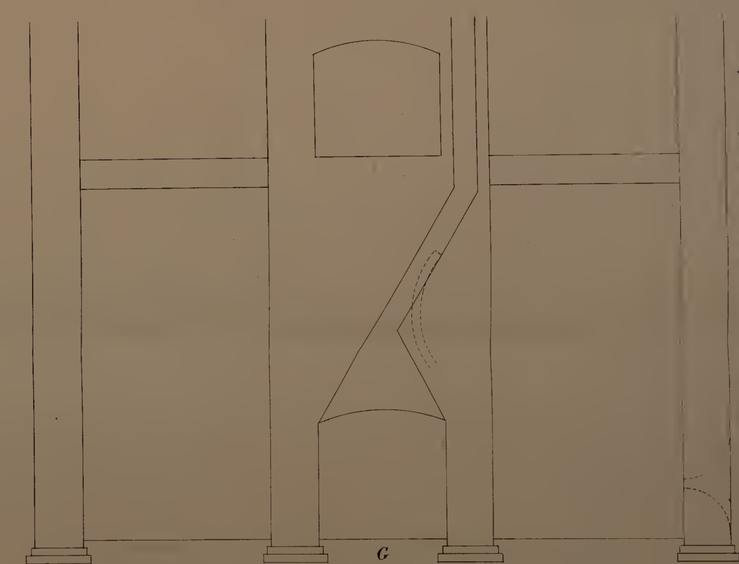

H - N.B. This Tube must be made in a circular form as here described and not with any sharp angle and C more convenient it may be carried without side the Building.

The enrolled drawing is colored.

London: Printed by George Edward Eyre and William Spottiswoode.
Printers to the Queens most Excellent Majesty. 1854

Townley's Improvements in the Prevention or Cure of Smoky Chimneys.

AND BE IT REMEMBERED, that on the same Fourth day of August, in the year above mentioned, the aforesaid Mary Townley came before our Lord the King in His Chancery, and acknowledged the Specification aforesaid, and all and everything therein contained, in form above written. And also the Specification aforesaid was stamped according to the tenor of the Statute in that case made and provided.

Inrolled the Seventh day of August, in the year above written.

THOS. STARR, a Master Extraordinary in Chancery.

LONDON:
Printed by GEORGE EDWARD EYRE and WILLIAM SPOTTISWOODE,
Printers to the Queen's most Excellent Majesty. 1854.